ViaLite
RF Splitter / Combiner

User Manual

LRD-HB-3

CR2721 20/11/09

Pulse Power & Measurement Ltd, 65 Shrivenham Hundred Business Park, Watchfield, Swindon, Wiltshire SN68TY, UK
Tel +44 (0)1793 784389 Fax +44 (0)1793 784391 Email sales@ppm.co.uk www.vialite.co.uk

Instrument Care and Safety Information

*Please read the whole of this section before using your **ViaLite** product. It contains important safety information and will enable you to get the most out of your link.*

Electrical Safety

The ***ViaLite*** 19" Rack Case power supply units are Safety Class 1 products (having a metal case that is directly connected to earth via the power supply cable).

When operating the equipment note the following:

- Hazardous voltages exist within the equipment. There are no user serviceable parts inside, and the covers should only be removed by suitably qualified personnel.
- The equipment does not have an isolating switch on the mains inlets. Equipment must be installed within easy reach of a clearly labelled dual pole mains isolation switch.
- Make sure that only fuses of the required rated current, and of the specified type (anti-surge, quick blow, etc.) are used for replacement.

Adjustment, maintenance and repair of the equipment should only be carried out by suitably qualified personnel.

For more information on the *ViaLite* range of products, please refer to the *ViaLite* system handbook Lxx-HB.

TABLE OF CONTENTS

1 INTRODUCTION 5

1.1 ViaLite RF Splitter / Combiner 5

1.2 Part Numbers 6

2 SETTING UP AND UNDERSTANDING THE SPLITTER 7

2.1 Installation 7

3 USING THE RF SPLITTER / COMBINER 8

3.1 Connecting the Module 8

3.2 Front Panel Indicators 8

4 SYSTEM INTEGRATION 9

5 RF SPLITTER / COMBINER TECHNICAL DATA 10

5.1 Specifications 10

5.2 Module Dimensions 10

5.3 Alarm Connections 11

6 MAINTENANCE AND FAULT-FINDING GUIDE 12

7 PRODUCT WARRANTY 13

1 Introduction

1.1 ViaLite RF Splitter / Combiner

PPM's ***ViaLite*** RF Splitter / Combiner module allows users to implement 1:1 redundancy switching with ViaLite RF modules.

Together with the ViaLite dual redundant power supplies and the 1:1 Redundancy Switch, the RF Splitter / Combiner provides the highest possible availability for the ViaLite system.

PPM's ***ViaLite*** RF Splitter / Combiner offers the following key advantages:

- Low insertion loss
- 50Ω and 75Ω options
- 10MHz to 2.5GHz operation
- Compact plug-in module

Complementary PPM ***ViaLite*** Products

- RF Signal modules for RF GPS, L Band, 70/140MHz, etc.
- Alarm Concentrator Module
- 1:1 Redundancy Switch
- 19" Rack Case
- Dual redundant PSUs

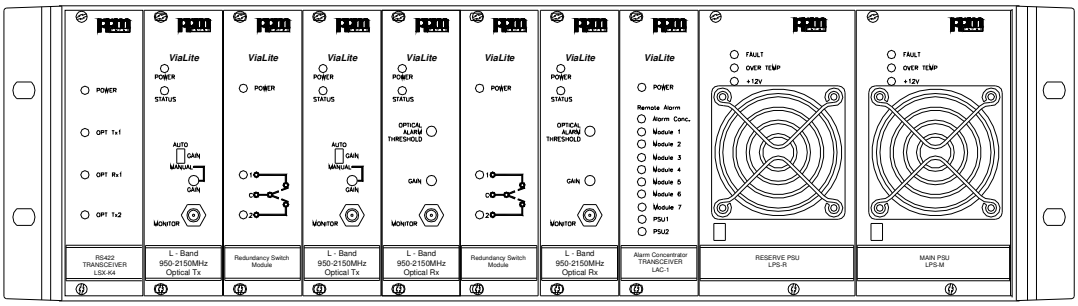

1.2 Part Numbers

This handbook covers the following modules:

Part Number	50ohm SMA	50ohm BNC	75ohm BNC	Plug-In
LRD-1	•			•
LRD-3			•	•
LRD-4		•		•

Refer to the ***ViaLite*** System Handbook for further details on the following ***ViaLite*** items:

Part Number	Description
LRK1S	Chassis for desktop or 19" rack installation. Accommodates up to 8 plug-in modules and 2 mains power supplies.
LRK2S	Chassis for 19" rack installation. Accommodates up to 8 plug-in modules and 2 mains power supplies.
LPS-M	Main Power Supply plug-in for LRK1S or LRK2S.
LPS-R	Reserve Power Supply plug-in for LRK1S or LRK2S.
LAC-1	Alarm Concentrator Module
LRS-10/30/40	1:1 Redundancy Switch Module
F6R1/x	FC/APC Patchlead, 2.8mm jacket. Length defined in metres by "x" (1m, 2m, 5m, 10m)

2 Setting up and Understanding the Splitter

Please read fully document Lxx-HB for information on installing your ***ViaLite*** equipment before commissioning your RF link system.

2.1 Installation

The RF Splitter / Combiner module is available in plug-in module form for use in PPM's ***ViaLite*** 19" Rack Case.

The module may occupy any position from 1 to 8 in the ***ViaLite*** 19" rack shelf, except where an Alarm Concentrator module is used, which must occupy position 8. The switch can even be situated in a different rack case to the signal modules that it is switching.

3 Using the RF Splitter / Combiner

3.1 Connecting the Module

Install as described in the ViaLite system handbook Lxx-HB. The splitter has three RF ports that connect to the transmitter modules being used. These are labelled as shown below.

RF Port	Connection
Port 1	Main Path
Port 2	Redundant Path
Port C	Common Port

3.2 Front Panel Indicators

The transmitter has one front panel LEDs to indicate status.

	Power LED
OFF	Unit is Off
GREEN	Unit is OK

4 System Integration

In a typical configuration, an RF signal is connected to Port C of the RF splitter and the two outputs, Ports 1 and 2, fed into two ViaLite Transmit modules. These modules are connected via two separate optical fibres to two ViaLite Receiver modules. These form the Primary and Secondary paths. The RF outputs of the Primary and Secondary Receivers are connected to Ports 1 and 2 respectively of the Redundancy Switch module. The RF output on the Common port is fed to the user equipment. The control cable connected between the Redundancy Switch and the Primary Receiver ensures that the Redundancy Switch selects the Secondary path in the event of a failure in the Primary path.

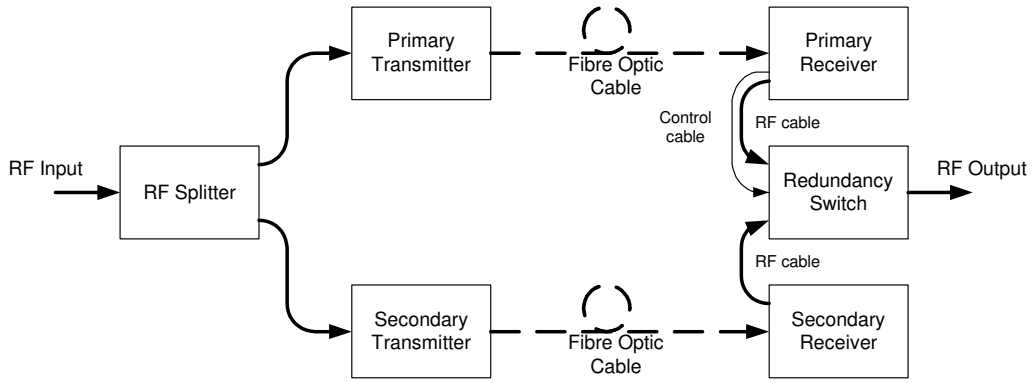

Typical 1:1 redundancy configuration

In this example configuration, the following parts would be required to implement the system :

Local Setup

Quantity	Part Number	Description
1	LRKxS	ViaLite Rack Case
1	LRD-n	RF Splitter
2	LRT-xx-6R	Transmitter Module

Optical Cables

Quantity	Part Number	Description
2	F6R1/n	Patchleads

Remote Setup

Quantity	Part Number	Description
1	LRKxS	ViaLite Rack Case
1	LRS-n	Redundancy Switch
2	LRR-xx-6R	Receiver Module
2	73627 / 73630	RF Switch Cables
1	73628	Switch Control Cable

5 RF Splitter / Combiner Technical Data

5.1 Specifications

Parameter	LRD-1	LRD-3	LRD-4
Bandwidth	10MHz – 2.5GHz	10 – 200MHz	10 – 200MHz
Insertion Loss	10 – 100MHz: <3.9dB 100MHz – 1.25GHz: <4.5dB 1.25GHz – 2.5GHz: <4.7dB	10 – 100MHz: <3.9dB 100 – 200MHz: <4.5dB	10 – 100MHz: <3.9dB 100 – 200MHz: <4.5dB
VSWR	<1.8:1	<1.8:1	<1.8:1
Abs. max. RF power input	1W	1W	1W

Operating Conditions

Operating Temperature	0°C to +40°C
Storage Temperature	-40°C to +70°C

User Interface

Front panel indicator LEDs	Power – Indicates DC power is applied to the module and that module is plugged in correctly
RF Input/Output	1 – Primary port (input/output) 2 – Secondary port (input/output) C – Common port (output/input)
Module Operating Power and Voltage	0.24W at +12VDC ± 0.5VDC

5.2 Module Dimensions

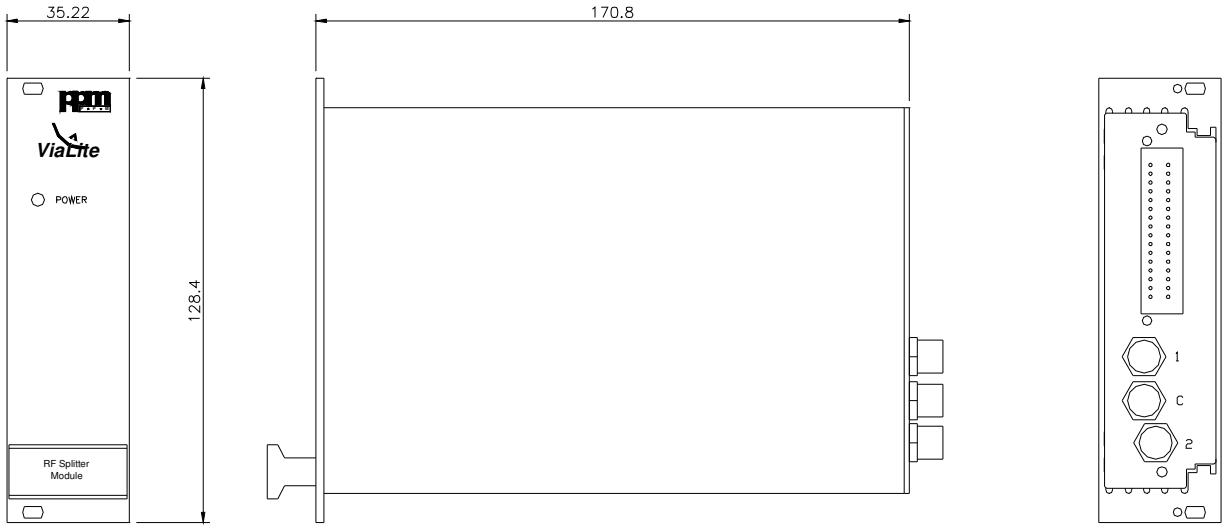

Plug-in Module

5.3 Alarm Connections

The circuit below shows how the alarm output should be configured for all types of ViaLite module. The switch (to the left of the dotted line) is internal to the module. The circuitry to the right of the dotted line is provided by the system user*.

In the presence of an alarm condition, the module will act as a high impedance node and will NOT sink current. This is a fail-safe system in that an alarm condition will be raised when a module is not present. This is an important factor when commissioning link management systems, as blank module positions will register module faults.

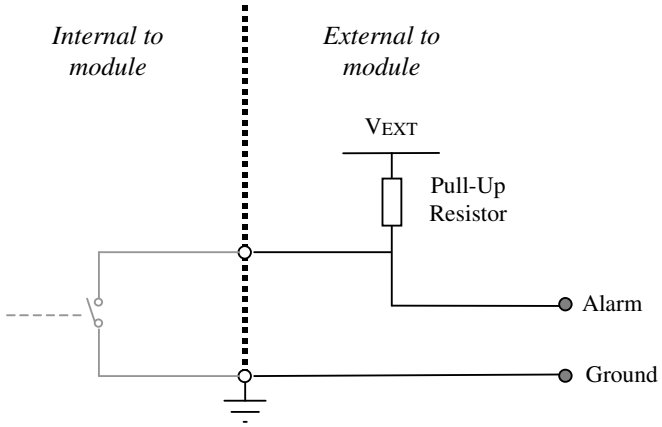

* This circuitry is provided by the Redundancy Switch module and the Alarm Concentrator module. When either of these modules are used, the alarm outputs can not be considered "VOLT FREE". This is because the Redundancy Switch module and the Alarm Concentrator modules use the same module alarm outputs to detect whether a unit has failed. When these modules are used, a voltage of between 5V and 12V may be present on the 'Alarm' output line when the module is in the failed mode. When the module is working correctly, the voltage on the 'Alarm' output line will be 0V (+1.0/-0). If true "VOLT FREE" contacts are required, please consult PPM.

Maximum current = 50mA
Maximum voltage = 15V

6 Maintenance and Fault-Finding Guide

Refer to the following table that gives a list of commonly encountered problems and suggested solutions.

Fault	Possible Causes	Solution
Power LED does not light.	Module not installed properly	Connect power source
Power LED lights up RED.	Internal fault	Consult local PPM office
No output signal at one or both output ports.	No input signal connected Proper connection not made	Connect input Ensure RF connector is properly mater and torqued as required

The ***ViaLite*** range of equipment is precision engineered and calibrated for optimum performance and accuracy before dispatch.

However, in the event of any problems or queries arising about the equipment, please contact PPM or your local agent.

7 Product Warranty

The Company guarantees its products, and will maintain them for a period of three years from the date of shipment at no cost to the customer. Extended warranty options are available at the time of purchase.

Please note that the customer is responsible for shipping costs to return the unit to PPM.

The Company or its agents will maintain its products in full working order and make all necessary adjustments and parts replacements during the Company's normal working hours provided that the Customer will pay at the rates currently charged by the Company for any replacements made necessary by accident, misuse, neglect, wilful act or default or any cause other than normal use.

Claims must be made promptly, and during the guarantee period.

IMPORTANT: -

Please contact both your selling agent and PPM prior to returning any goods for Warranty or Non-Warranty repairs. Goods will not be accepted without a valid Goods Return Number (GRN).

© PULSE, POWER & MEASUREMENT LTD 2009.
NO PART OF THIS DOCUMENT MAY BE REPRODUCED OR TRANSMITTED IN ANY FORM WITHOUT PRIOR WRITTEN PERMISSION.
PPM LTD., 65 SHRIVENHAM HUNDRED BUSINESS PARK, SWINDON, SN6 8TY, UK.
TEL: +44 1793 784389 FAX: +44 1793 784391
EMAIL : INFO@PPM.CO.UK WEBSITE : WWW.PPM.CO.UK